65i25 Against Wall

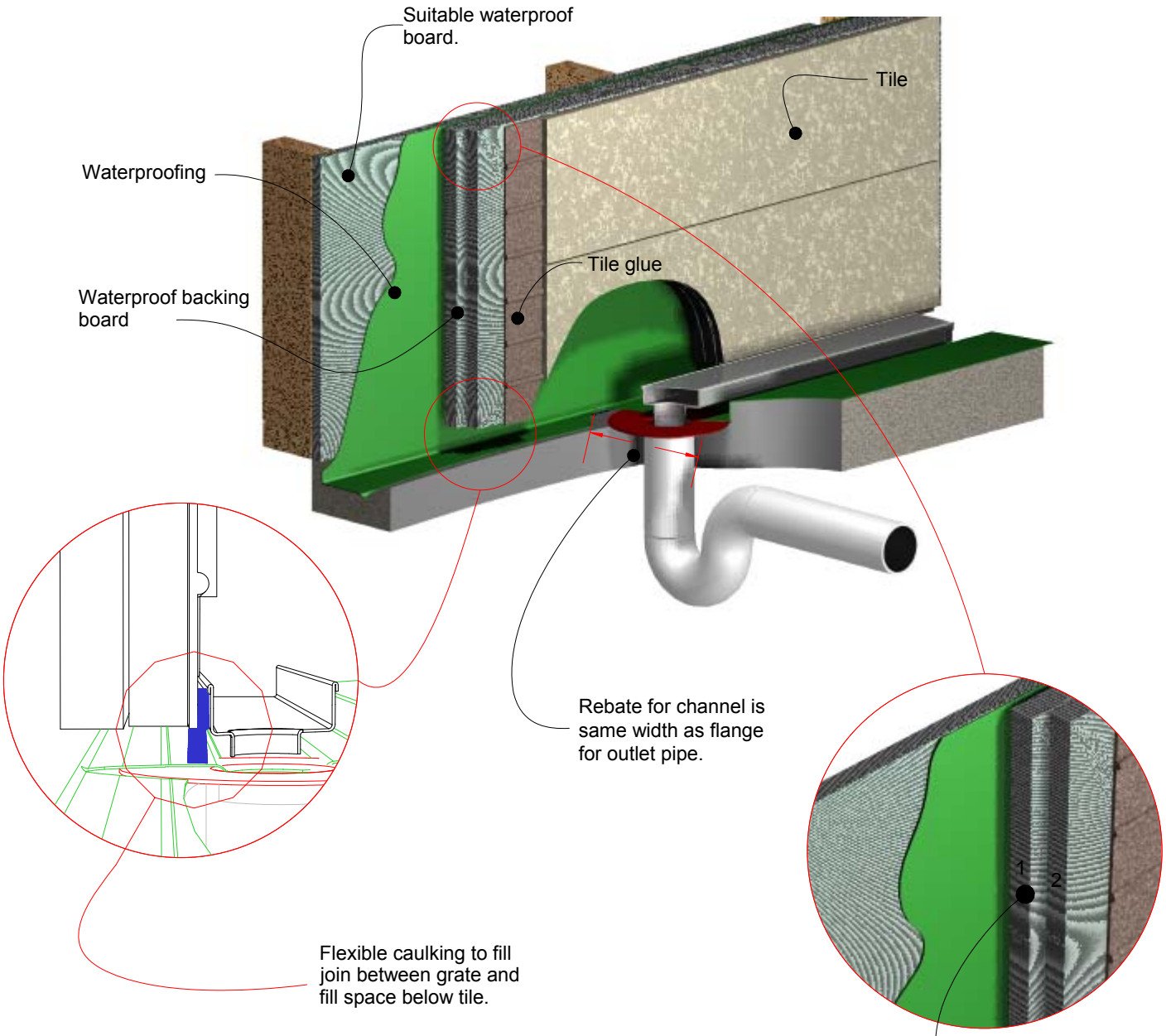

NOTE, due to the diameter of leak control or puddle flanges up to two layers of waterproof backing board or villa board may be needed to pack out wall before tiling.

Copyright 1989-2018 Stormtech Pty Ltd

This drawing is the intellectural property of STORMTECH Pty Ltd.

Drawings are not to scale. Use dimensions shown.

Patent number: 733361

WaterMark
Level 2 Licence WMKT 21249

AUSTRALIAN MADE AND OWNED

e info@stormtech.com.au, w www.stormtech.com.au